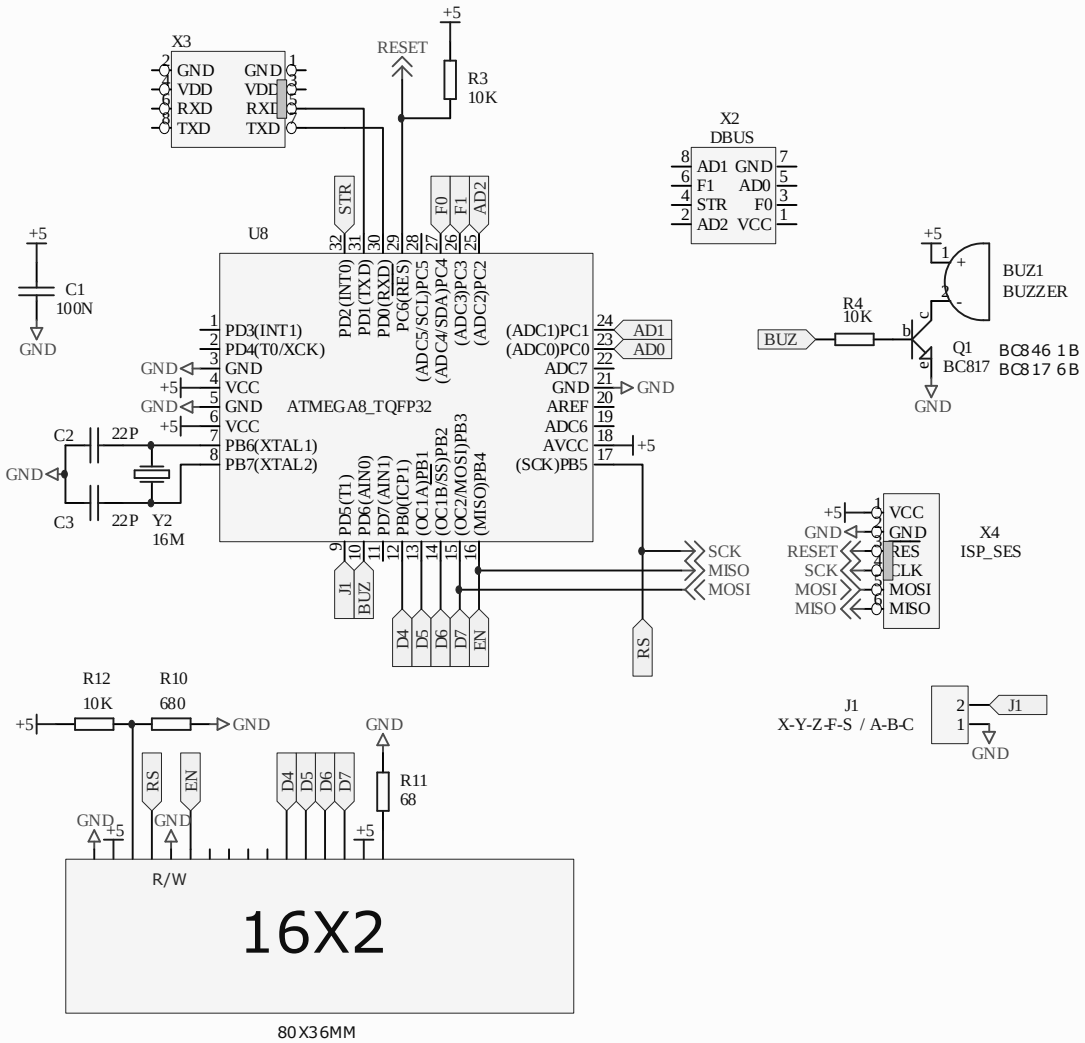

Title	***LCD_DBUS o LCD_RS232***	**PROCOM M.E.** *Via Senatore Pellegrini 38 31038 PAESE TREVISO ITALY*	PROCOM
Size: A4	Number: 000000 Revision: A		
Date: 07/04/2013	Time: 13.22.09 Sheet 1 of 1		
File:C:\Documents and Settings\maurizio\Desktop\progetti sul desktop\pcam05\pcam5 display\LCD_DBUS.SchDoc			